MU-055 Kinetic Wi-Fi Thermostat

Product Overview

The MU-055 is a modern, flush-mounting Wi-Fi thermostat designed for efficient control of water-based underfloor heating systems. This thermostat offers versatile 1-week programmability with 5+2, 6+1, and 7-day scheduling options, along with manual mode for flexible operation. Key features include remote control and monitoring via Wi-Fi connectivity, compatibility with Google and Alexa for smart home integration, and precise temperature regulation with multiple sensor modes (internal, external, or both). The MU-055 also provides overheat protection when used with an external sensor, ensuring safety for floor coverings.

Technical Data

Item	MU-055 Kinetic Wi-Fi Thermostat
Product Code	PDW1-0280 – White
	PDW1-0281 - Black
Dimensions	86mm x 86mm x 40mm
Mounting Type	In Wall (35mm minimum)
Weight	0.185kg
Colour	White or Black
Voltage	230V AC 50Hz
Power Consumption	<3W
Max Load Current	3Amp
Protection Rating	IP20
Probe Sensor	NTC 10k, 1% (TP-200 / BP-260 not included)
Working Temp	5–35°C
Accuracy	+/- 0.5°C
Programming ability	1 Week (5+2), (6+1), (7 day), Manual
Compliance	EN60730-2.7, (EN60730-1TBC), CE, UKCA, PSTIA
Compatibility	Google, Alexa

Features

Appearance

- LED display for a more user-friendly interface.
- Touch-sensitive buttons for a smoother experience.
- Ultra-thin embedded panel seamlessly fits various wall types.
- Sleek design with a modern and elegant look.
- Compatible with standard 86mm square cassettes.

Functionality

- Enhanced functionality with Wi-Fi connectivity.
- Precise temperature control with an accuracy of ±0.5°C for consistent warmth.
- Power-off protection to securely save all your settings.
- Programmable 5+2, 6+1, 7 day weekly schedule, or fixed manual mode promoting smart, eco-friendly living or operating simplicity.
- Supports creating local product groups and multi-user sharing.
- Seamless integration with Amazon Echo, and Google Home, enabling a full range of voice control options.

Safety

- This product should be installed by a qualified electrician.
- Ensure that the electrical wiring of the installation, as well as the connections to and from the thermostat and any connected remote sensor, are in accordance with BS7971—the latest edition of the IET Wiring Regulations.
- The thermostat must be wired to the electric mains through a switch capable of disconnecting all poles compliant with the current safety standards and with a contact separation of at least 3mm in all poles.
- Before commencing work on the installation, the electricity supply must be disconnected.
- During installation earthing a metal back box is critical to ensure fault current is safely directed to ground, thereby maintaining compliance with electrical safety standards and reducing the risk of exposed conductive parts becoming live during a fault condition.

Disposal

This product should not be disposed of in household waste. The product should be disposed of in accordance with your local waste and recycling schemes.

Installation

For optimal performance, position your thermostat approximately 1.5 meters from the floor, ensuring it's away from direct sunlight, heat sources like radiators or cookers, and drafts; maintain clear airflow around the unit by avoiding obstructions, and when disabled access is a requirement, the installation height must be reduced to below 1.2 meters to comply with accessibility standards.

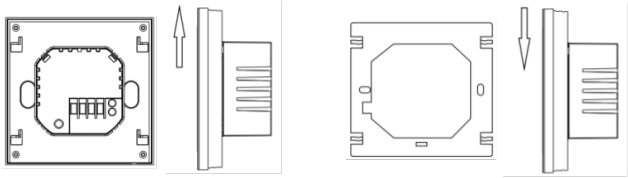

Wiring Diagram:

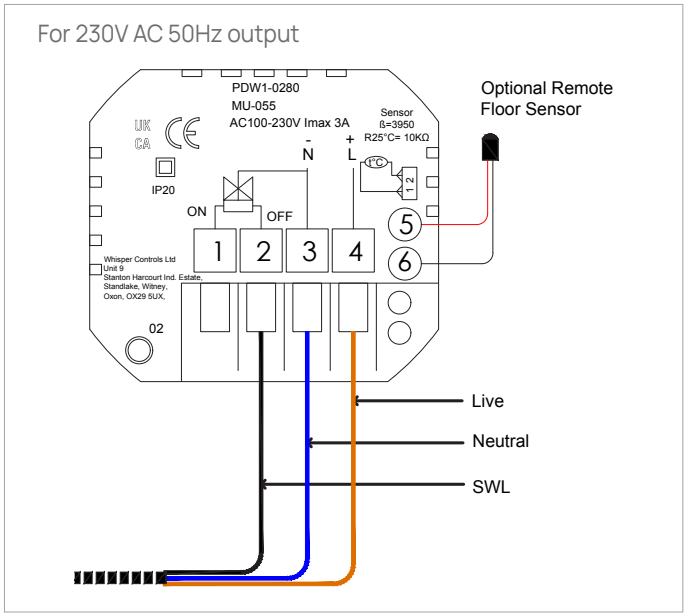

whisper

Whisper Controls Limited
Unit 9 Stanton Harcourt Industrial Estate, Standlake, Witney, Oxon, OX29 5UX, United Kingdom

Tel: +44 (0)1993 640073 **whispercontrols.com**

Dimensions (mm)

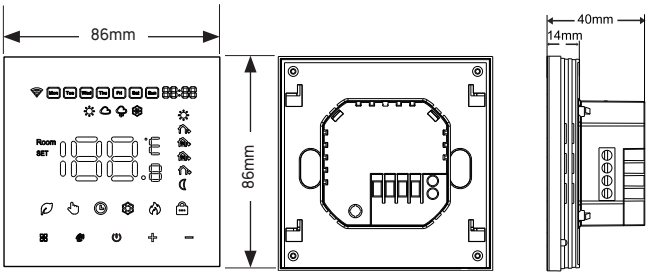

Symbols Display

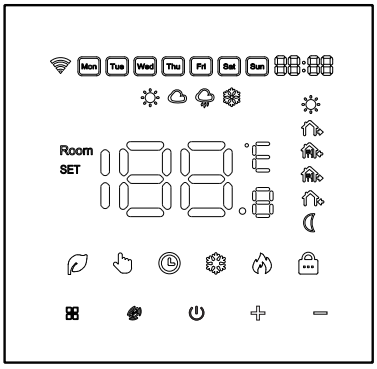

Wi-Fi		Days		
Weather		Time		
Room Temperature		Period		
Programme Mode		Frost protection		
Manual Mode		Heating		
ECO Mode		Lock		
Menu	ECO	On/Off	Add	Minus

Eco Mode Operation

The Eco Mode is a convenient function that allows you to temporarily set your thermostat to an energy-saving temperature. This is particularly useful when you want to reduce energy consumption, such as when leaving the house unexpectedly for a short period.

To activate Eco Mode:

- In the power on state, press the button. The thermostat will switch to the Eco Mode temperature.

Important Notes:

- The default Eco Mode temperature is 16°C.
- To exit Eco Mode and return to your previous setting (programmed or manual), simply press any button on the thermostat.
- The Eco Mode temperature can be changed within the advanced settings menu of your thermostat, allowing you to customise it to your preferred energy-saving temperature, see advanced setting menu instructions for details.

Frost Protection

The thermostat includes a frost protection function designed to prevent your heating system from freezing during cold periods. When enabled, this feature maintains a minimum temperature of 0°C. This ensures that the pipes in your heating system do not get damaged by frost. The frost protection function is enabled by default but can be deactivated within the thermostat's advanced settings menu if desired.

Operation

1. **Power On/Off:** Press to turn on/off.
2. **Mode:** On main screen, press to change program or manual mode.
3. **Time setting:** Long press for 5 seconds to enter the time setting, press to switch hour/minute/week, press + − to set time, and press to exit.

Note: In Wi-Fi mode, the true time will be automatically obtained.

4. **Lock:** Press + and − for 5 seconds to lock the thermostat. The lock symbol will be displayed when the thermostat has been locked.

   To unlock, simply press + and − for 5 seconds again to unlock the thermostat.
5. **ECO key:** In the power on state, press the to start the ECO mode, and press any key to exit this mode.

Whisper Controls Limited
Unit 9 Stanton Harcourt Industrial Estate, Standlake, Witney, Oxon, OX29 5UX, United Kingdom

Tel: +44 (0)1993 640073 **whispercontrols.com**

Time programming instruction

In the power off state, long press ⊞ and for 5 seconds to enter the programming mode, press ⊞ to switch items, press + − to adjust the value of each parameter. Once finished, press ⏻ to exit.

1. Wake-up 2. Leave 3. Return(am) 4. Leave(pm) 5. Return(pm) 6. Sleep

Key	Event		Icon	Time	Time Adj.	Default	Temp. Adj.
⊞	Week Day	1	☼	06:00	+ −	20°C	+ −
		2		08:00		16°C	
		3		11:30		20°C	
		4		12:30		16°C	
		5		17:00		20°C	
		6	☾	22:00		16°C	
	Weekend	1	☼	08:00		20°C	
		2	☾	23:00		16°C	

Temporary Override

While in program mode, the thermostat allows for temporary manual temperature adjustments. If you increase or decrease the temperature using the adjustment buttons, the thermostat will maintain this new setting until the next programmed time period, at which point it will revert to the scheduled temperature. This function offers convenient, short-term flexibility without disrupting your overall programming.

Advanced Settings Menu

To access the advanced settings menu, press the ⏻ button to ensure that the thermostat is turned off. Then, press and hold both the ⊞ and − buttons simultaneously for five seconds; the advanced settings menu will appear on the screen to indicate successful entry.

Navigate through the various settings by pressing the ⊞ button repeatedly, with each press displaying a different adjustable parameter.

Adjust the value of each parameter using the + and − buttons.

Finally, once all desired adjustments are made, press the ⏻ button to exit the advanced settings menu and save the changes.

Item		Default Value	Range
Adj	Temperature calibration	0	-9~9°C
SEN	Sensor mode	IN	IN; AL; OU
OH	Overheating protection	60°C	5°C~60°C
dif	Switching differential	01	01~06 (0.5~3°C)
SLFP	Anti-freeze function	ON	ON/OFF
PrG	Period of time mode	01	OF: Manual 01: 5+2 02: 6+1 03: 7
MxFL	Max. temperature	40°C	20°C~70°C
MLFL	Lower temperature limit setting	10°C	5°C~20°C
BLIG	Standby backlight brightness	01	00: Total darkness 01:20% 02:50% 03: Full brightness
ECO	Eco temperature setting	16°C	10°C~20°C
LOAD	Load selection	01	01: ≤1.5KW 02: 1.5~2.6KW 03: 2.6~3.5KW
CLEC	Reset	−	Press + and hold for 5s

Sensor Modes

Your thermostat offers flexible temperature control through the various Sensor Modes, allowing you to tailor the operation to your specific needs. This mode selection determines which sensor(s) the thermostat uses to regulate the room temperature.

IN (Internal Sensor): In this mode, the thermostat exclusively uses the internal sensor to measure and control the room temperature. This setting is ideal for general room heating where floor temperature regulation is not required.

AL (All Sensors): This mode utilises both the internal sensor and an external sensor (if connected). The thermostat will primarily regulate the room temperature based on the internal sensor readings. However, it will also monitor the floor temperature via the external sensor, ensuring it remains below the 'OVERHEAT PROTECTION' set point. This is crucial for protecting delicate floor coverings from excessive heat.

OU (External Sensor Only): This mode relies solely on the external sensor for temperature control. It's particularly useful in situations where the thermostat is located outside the area being heated, such as bathrooms, or when floor temperature is the primary concern. The external sensor can be positioned on the floor or mounted on a wall in the desired location.

whisper

Whisper Controls Limited
Unit 9 Stanton Harcourt Industrial Estate, Standlake, Witney, Oxon, OX29 5UX, United Kingdom

Tel: +44 (0)1993 640073 **whispercontrols.com**

Wi-Fi Connection

In the power off state, press and hold the plus and minus keys at the same time, when the screen shows full display and turn on, the screen Wi-Fi icon is flashing, the thermostat is ready for Wi-Fi connection.

Download your App

Step 1: Download and install app by scanning QR code or searching " Smart Life" in Google Play or App store. Login in or register a new account. Keep app login in.
Note: Tuya App is also available to connect the thermostat.

Step 1: Download and install app by scanning QR code or searching " Smart Life" in Google Play or App store. Login in or register a new account. Keep app login in.
Note: Tuya App is also available to connect the thermostat.

Step 2: Add your thermostat to the Smart Life app or Tuya app.

Ensure your mobile phone is connected to a 2.4 GHz Wi-Fi network before adding the thermostat(s). Please note that the thermostat is only compatible with 2.4 GHz Wi-Fi networks

.

There are two options for adding your device: Add Device or Add Manually.

Add Device (automatic thermostat search):

Turn on Bluetooth on your phone. Log in to the app and either tap "Add Device" on the homepage or tap the "+" icon in the top right corner and select "Add Device". Then, choose "Smart Thermostats" as they appear, enter your Wi-Fi password (PIN), and tap "Next". After a short wait, the thermostat should be added automatically.

Add Manually:

Turn on Bluetooth on your phone. Log in to the app and either tap "Add Device" on the homepage or tap the "+" icon in the top right corner and select "Add Device". Then, scroll down the screen and choose "Small Home Appliances", then select "Thermostat (Wi-Fi)". Ensure your mobile phone is connected to a 2.4 GHz Wi-Fi network and that your thermostat is flashing rapidly. Then, tap "Next" and confirm by tapping "Confirm the indicator is blinking". After a short wait, the thermostat will be added successfully. Tap "Done" to control your thermostat via the app.

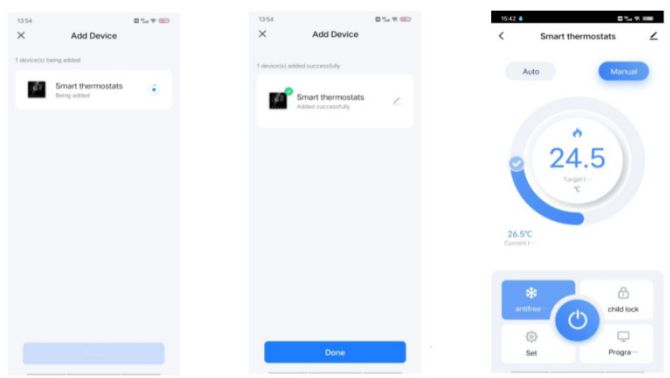

Whisper Controls Limited
Unit 9 Stanton Harcourt Industrial Estate, Standlake, Witney, Oxon, OX29 5UX, United Kingdom
Tel: +44 (0)1993 640073 whispercontrols.com